Flashing and Weather Barrier Installation order.
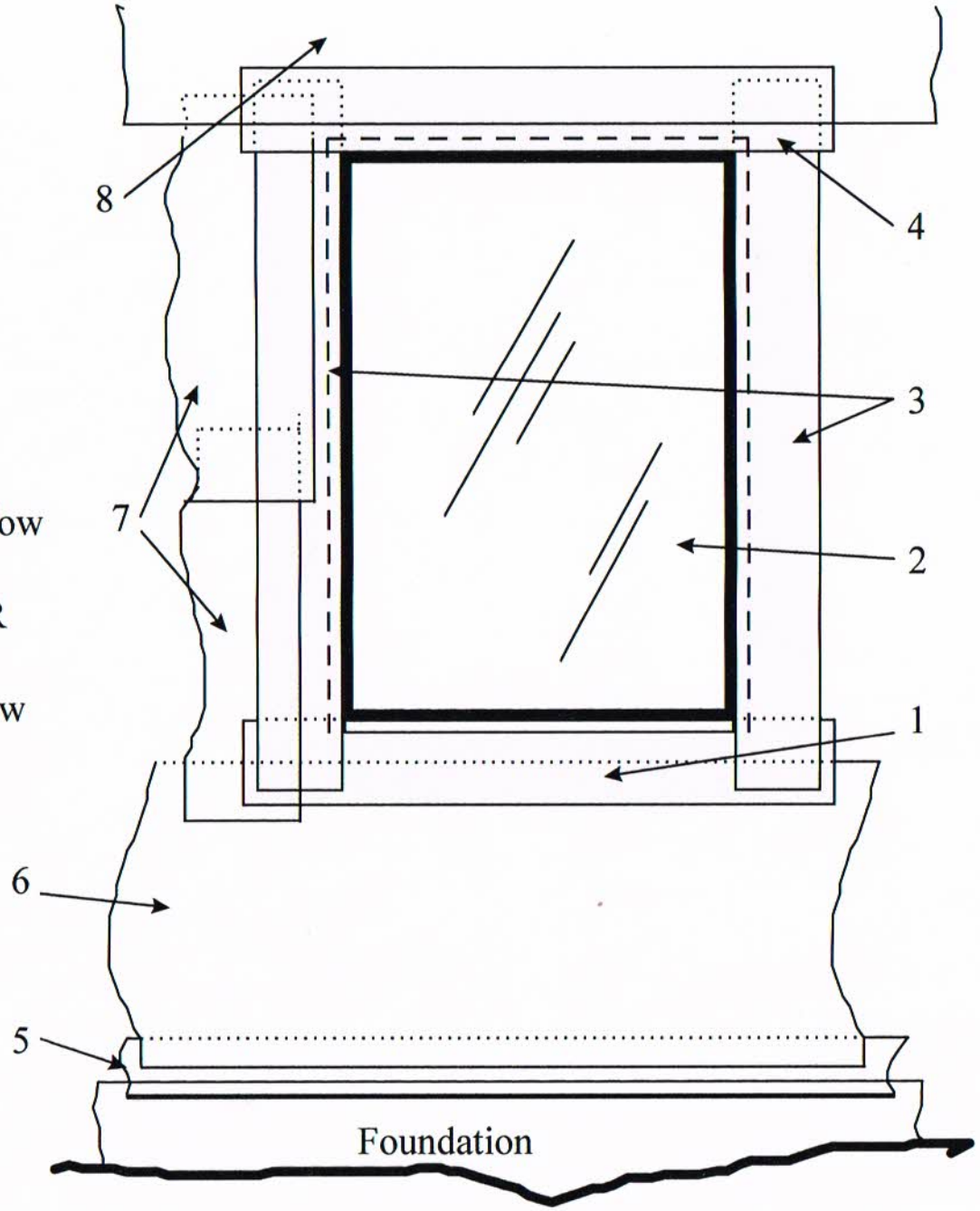
1. Bottom of window opening.
2. Install window
3. Side Flashings at window
4. Top of window Flashing.
5. Top of Foundation Flashing
6. Weather Barrier OVER Foundation Flashing and UNDER Bottom of Window Flashing.
7. Lapped Weather Barrier up wall OVER Window Side Flashings
8. Lapped Weather Barrier OVER Window Top Flashing.